SAG SEGURIDAD

LOCKS

Model EP50

- Stainless steel base plate and mechanisms (AISI 304)
- Iron pin and zamak housing
- Supplied with **no cylinder**.
- Only works with Cylinder KESO 4000SΩ and 8000Ω2

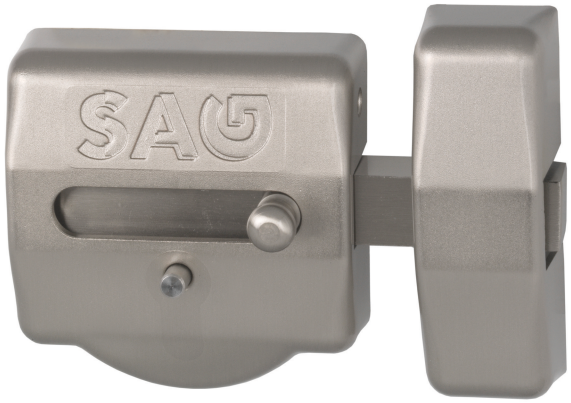

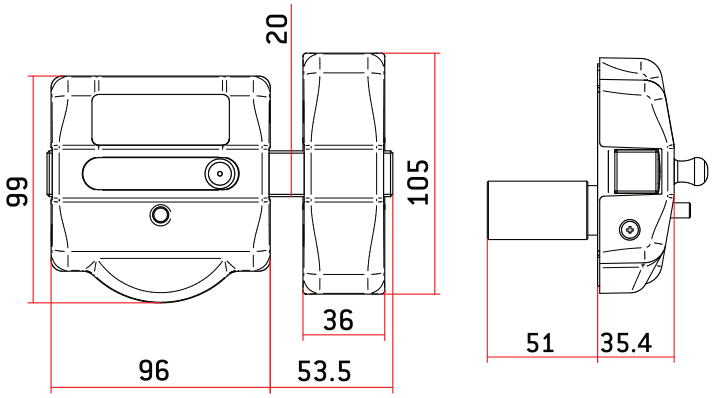

Extra Plate

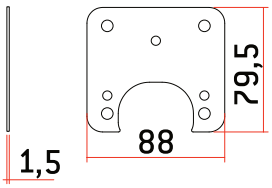

Extra Latch Plate

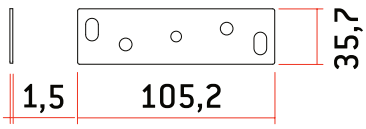

MODEL	CODE	WEIGHT (G)	TYPE CILINDER (KESO)
Chrome-plated EP50	AACP0069	1.205	Series 4000SΩ Ref. 48.003 Series 8000Ω2 Ref. 88.003
Brass-plated EP50	AACP0068	1.205	
Satin Nickel-plated EP50	AACP0070	1.205	
White-Plated EP50	AACP0071	1.205	
Black-Plated EP50	AACP0072	1.205	
Extra Plate (Optional)	AACP0111	60	
Extra Latch Plate (Optional)	AACP107	43	

*Note: Please contact SAGseguridad for custom-made pins